Hexagon Pendants Installation Instructions

Product Specifications				
Model No.	HCP-672130	HCP-672170	HCP-672250	HCP-672300
Material	Aluminium	Aluminium	Aluminium	Aluminium
Colour	Black	Black	Black	Black
Installation Type	Ceiling - Suspended	Ceiling - Suspended	Ceiling - Suspended	Ceiling - Suspended
IP Rating	IP20	IP20	IP20	IP20
Input Voltage	240v	240v	240v	240v
Protection Class	1 (Requires Earth)	1 (Requires Earth)	1 (Requires Earth)	1 (Requires Earth)
Lamp Base	Built in LED	Built in LED	Built in LED	Built in LED
Lamp Wattage	1x 13W	1x 17W	1x 25W	1x 30W
Colour Temp	Tri-Colour - 3000k, 4000k, 5000k	Tri-Colour - 3000k, 4000k, 5000k	Tri-Colour - 3000k, 4000k, 5000k	Tri-Colour - 3000k, 4000k, 5000k
Lumens	1200lm, 1250lm, 1300lm	1600lm, 1650lm, 1700lm	2400lm, 2450lm, 2500lm	2900lm, 2950lm, 3000lm
CRI	> 80	> 80	> 80	> 80
Dimmable	Yes - Triac Dimmable	Yes - Triac Dimmable	Yes - Triac Dimmable	Yes - Triac Dimmable
Warranty	5 Years Replacement*	5 Years Replacement*	5 Years Replacement*	5 Years Replacement*

HCP-672130 Dimensions

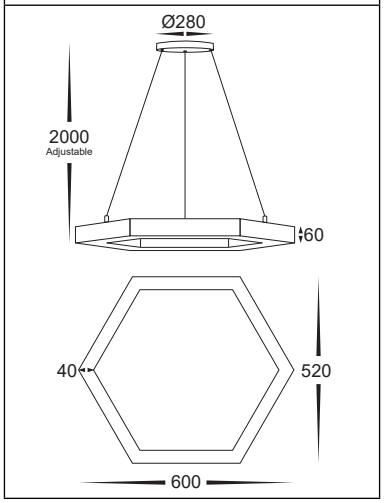

HCP-672170 Dimensions

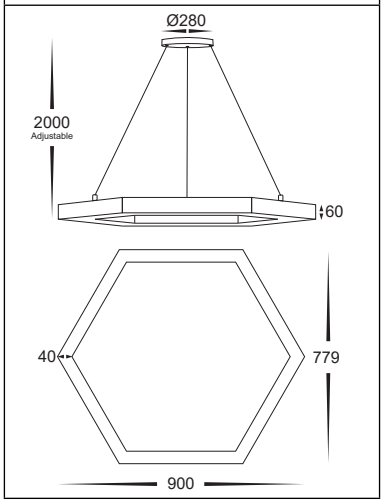

HCP-672250 Dimensions

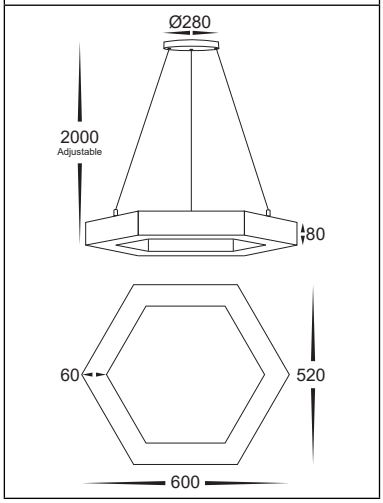

HCP-672300 Dimensions

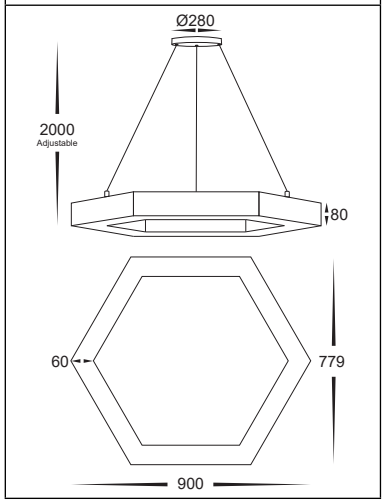

Important Safety Issues:

- This product must be installed by a qualified electrician according to AS/NZS 3000.
- Ensure all electrical mains are disconnected before any installation.
- Modification of this product will void any warranty.
- Havit Commercial does not take responsibility for wrong installation, incorrect use, or use of installation material that does not belong to the system.
- Aluminium and 304SS fittings must not be installed within 5km of any salt water environments.
- All o-rings and seals must be in place correctly to maintain warranty
- This form may be updated at any time due to product improvements, please check online installation form for most current version.

Steps for Installation:

1. Make sure that the electrical circuit is free of voltage (master switch off)
2. Remove bracket from canopy by removing screws on side and set aside
3. Install bracket in desired location using appropriate screws for application.
4. Push in cable grommet on to allow cable to slide.
5. Pull cable through and adjust to desired length and cut off any excess.
6. Connect the cable: Use wire with earth, connect earth first then positive and then neutral
7. Reattach canopy to bracket by reinserting screws making sure these are tight.
8. Check fitting is Level, If not adjust cables by pushing in cable grommet until level.
9. Fitting is preset to 3000k, To change slide switch on top of fitting to desired colour temperature
10. All connections must be carried out carefully, inspect all contacts before switching back on the electric circuit.

Must be installed by a licensed electrician

Contact Details:

8/133 Beauchamp Road
Matraville NSW 2036
Australia

Tel: 02 9381 8383
Email: sales@havitcommercial.com.au
Web: www.havitcommercial.com.au

Warranty Terms & Conditions*

www.havitcommercial.com.au